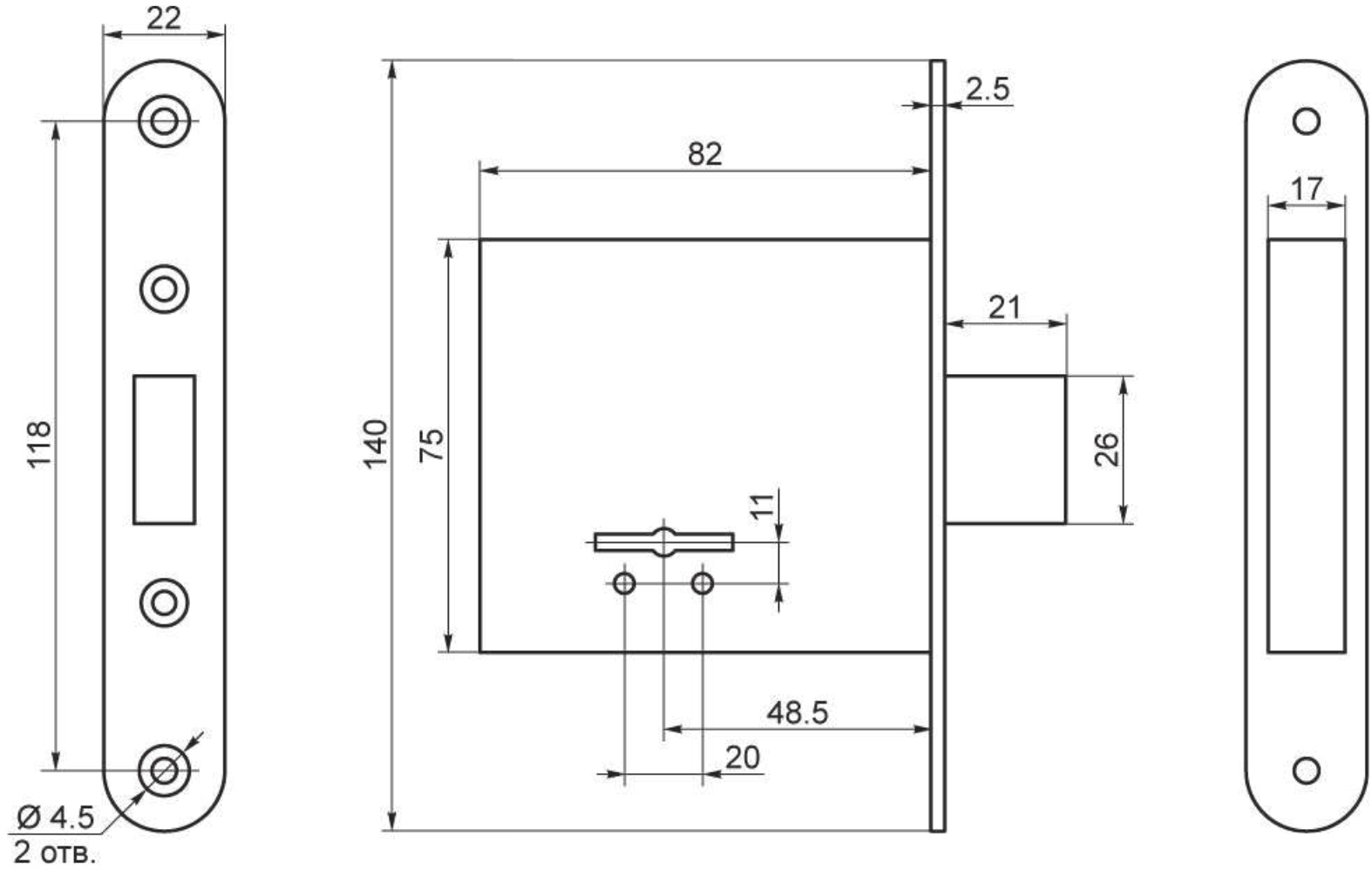
22
118
Ø 4.5
2 отв.
140
75
82
2.5
21
26
11
48.5
20
17